Anglia Ruskin University

Maths: What, Why and How to teach with a diverse mathematical entry standard

Anglia Ruskin University

Diversity in Engineering

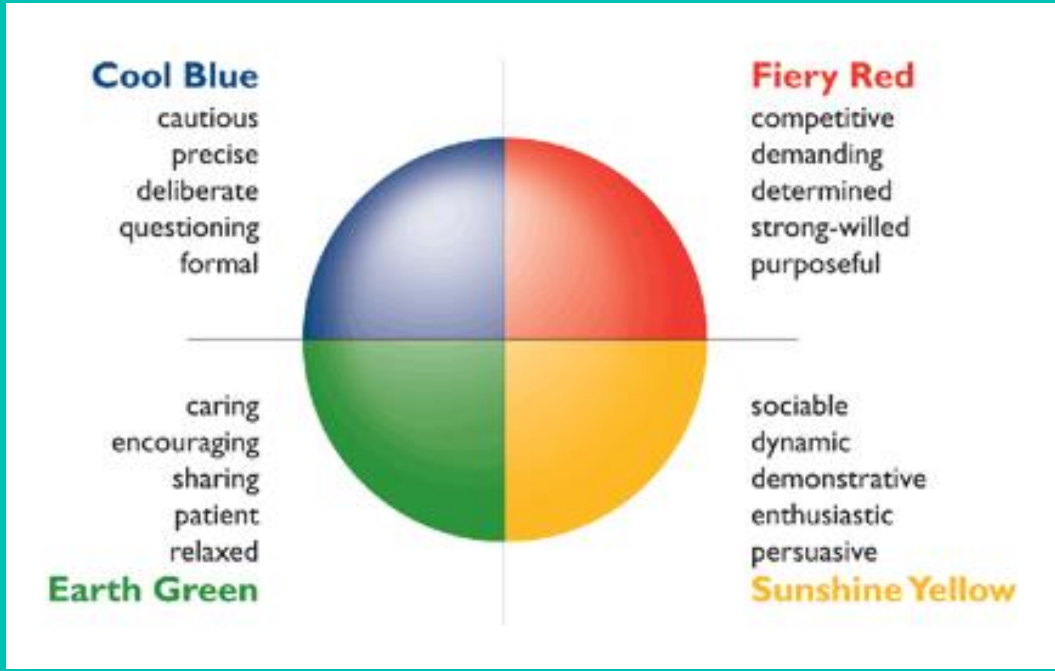

Anglia Ruskin University

Do engineering students need A Level Maths?

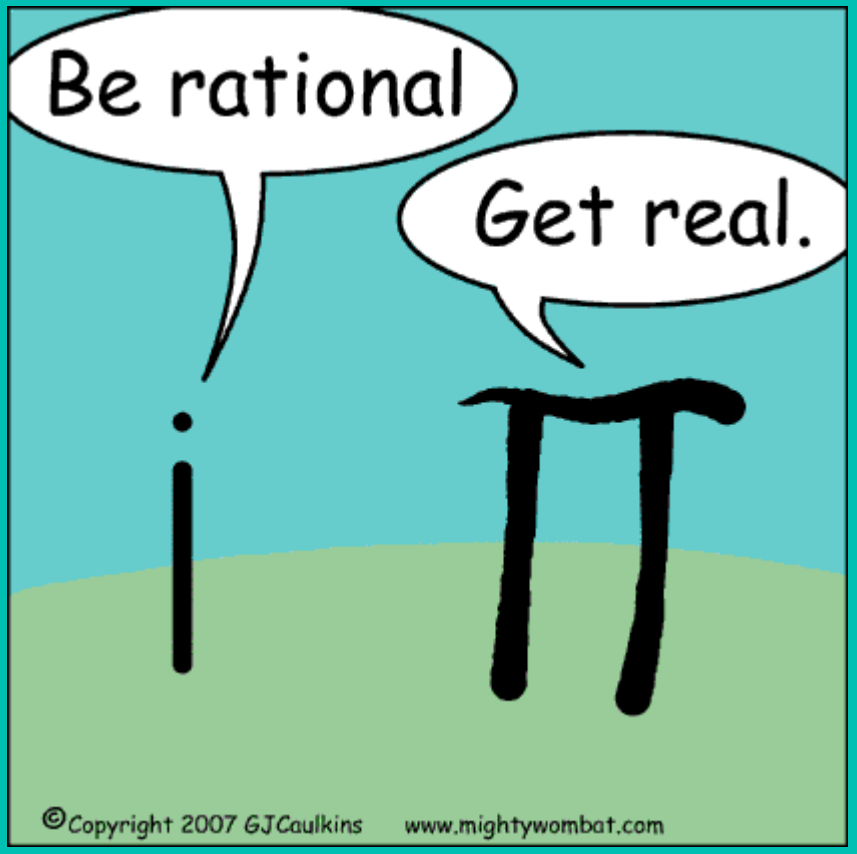

Anglia Ruskin University

Why do Civil Engineers need maths?

It is one of the languages of engineering.

$$\tau = c' + \sigma' tan\phi'$$

Anglia Ruskin University

Why do Civil Engineers need maths?

Learning maths skills develops problem solving skills.

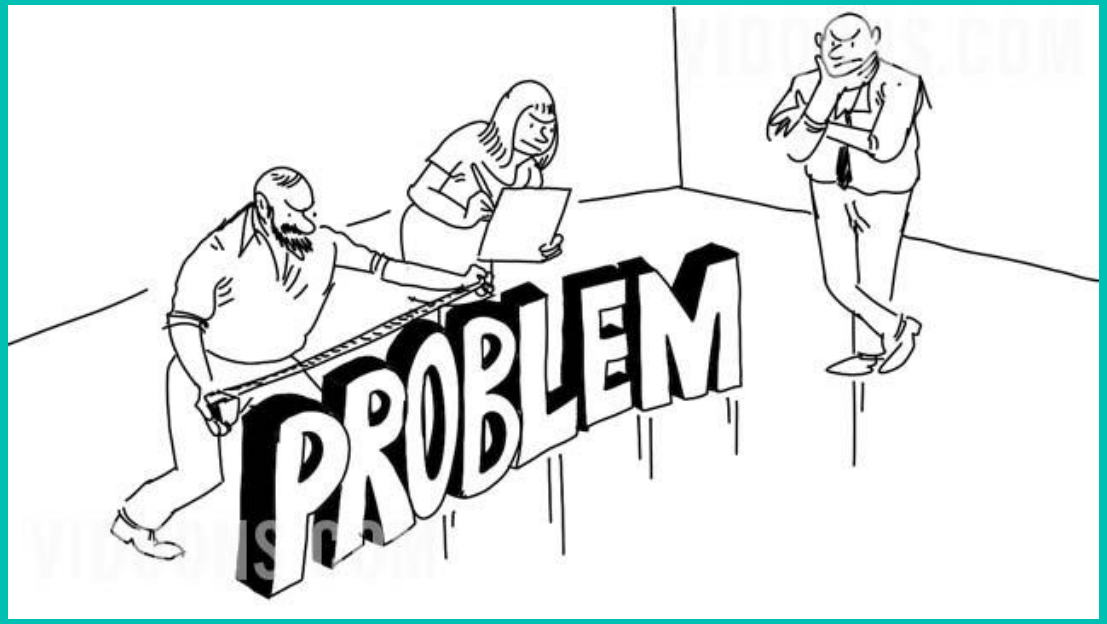

Anglia Ruskin University

What maths do Civil Engineers need?

- Employers want a civil engineer who is a confidence with mathematics although the maths that engineers use on a day to day basis is very basic.

- For example if a report is commissioned to a specialist on statistics an engineer must be comfortable with the analysis

Anglia Ruskin University

1st use of calculus in an engineering text book: Architecture Hydraulique by Bernard Forest de Belidor (1737-53)

228 ARCHITECTURE HYDRAULIQUE, LIVRE I.

on aura après la réduction $\frac{b}{15h} \times \overline{6ann + 4ccq - 10anc}$, qui comprend la même chose que la formule. (548)

Autre formule pour mesurer la même chose lorsque le sommet du triangle est en bas.

549. Quant au second triangle CEA (fig. 72) nous servans des mêmes lettres, on aura AE (h), EC (b) :: AH ($h - x$), HG $= \frac{bh - bx}{h}$, qui étant multiplié par ydx, donne $\frac{bhydx - bxydx}{h}$; & tirant de l'équation à la parabole $x = \frac{yy}{p} - c$, & $dx = \frac{2ydy}{p}$ pour substituer les valeurs de x & de dx, on aura $\frac{2by^2dy}{p} - \frac{2by^4dy}{p^2h} + \frac{2bcy^2dy}{ph}$, dont l'intégral est $\frac{2by^3}{3p} + \frac{2bcy^3}{3ph} - \frac{2by^5}{5p^2h}$ pour l'expression du solide : or si l'on substitue les valeurs d'y^3 & dy^5, on aura $\frac{2b}{3p} \times \overline{cp + px} \times \sqrt{cp + px} + \frac{2bc}{3ph} \times \overline{cp + px} \times \sqrt{cp + px} - \frac{2b}{5p^2h}$; & supposant $x = 0$, il reste $\frac{2bc}{3} \times \sqrt{cp} + \frac{2bcc}{3h} \times \sqrt{cp} - \frac{2bcc}{5h} \times \sqrt{pc} = \frac{2bcq}{3} + \frac{2bccq}{3h} - \frac{2bccq}{5h}$, qui étant ajouté à la grandeur précedente avec des signes contraires, donne $\frac{2abhn}{3h} + \frac{2abcn}{3h} - \frac{2abnn}{5h} + \frac{2bccq}{5h} - \frac{2bchq}{3h} - \frac{2bchq}{3h}$ pour l'intégral complet, lorsque $x = h$, ou que $n = c + h$, ou $n = c + x$, parce qu'on a alors $cp + px = qq = pn$.

FIG. 72.

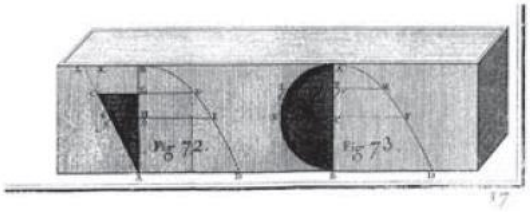

Anglia Ruskin University

Late 18th Century small number of engineers (in continental Europe) started to use complex analytical geometry and calculus.

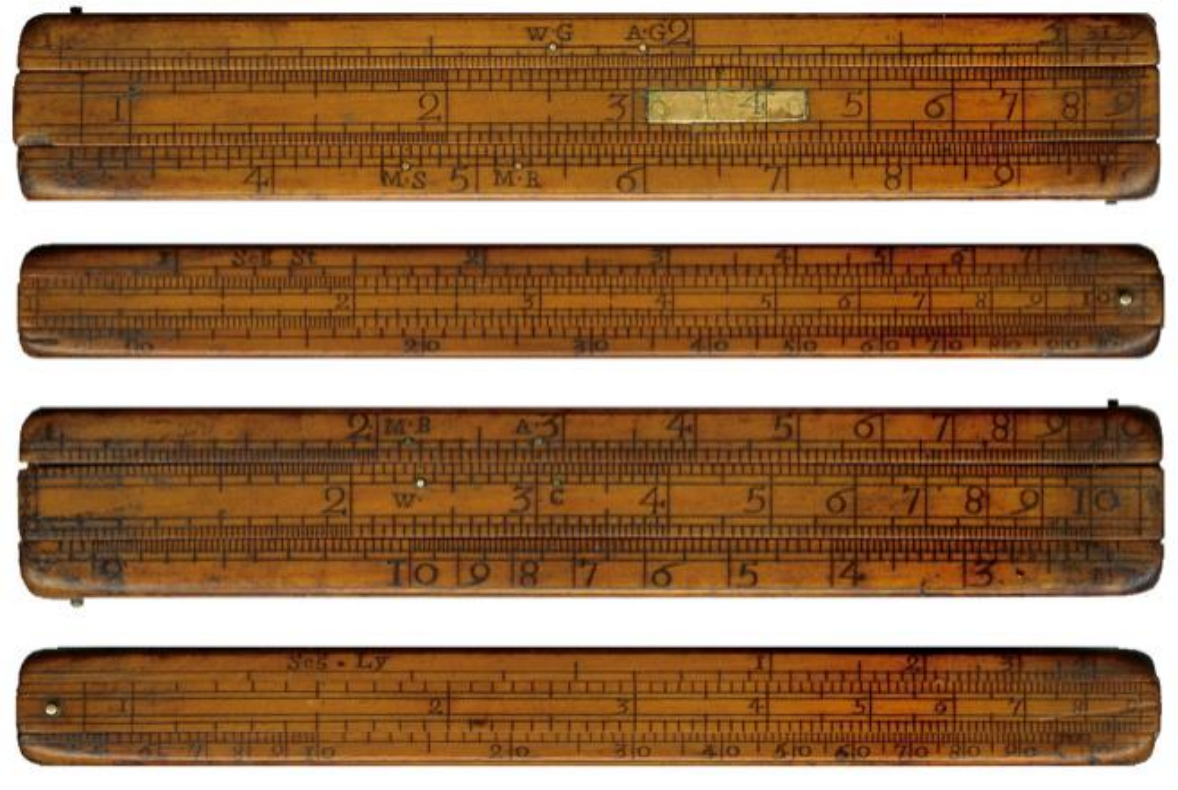

Slide rules were used for 3 figure accuracy for day to day calculations.

Anglia Ruskin University

Brunel used calculus to design flattest bridge arches built (ever).

Maidenhead Railway Bridge
Construction completed 1838

Anglia Ruskin University

Bishop's methods of slices, 1955

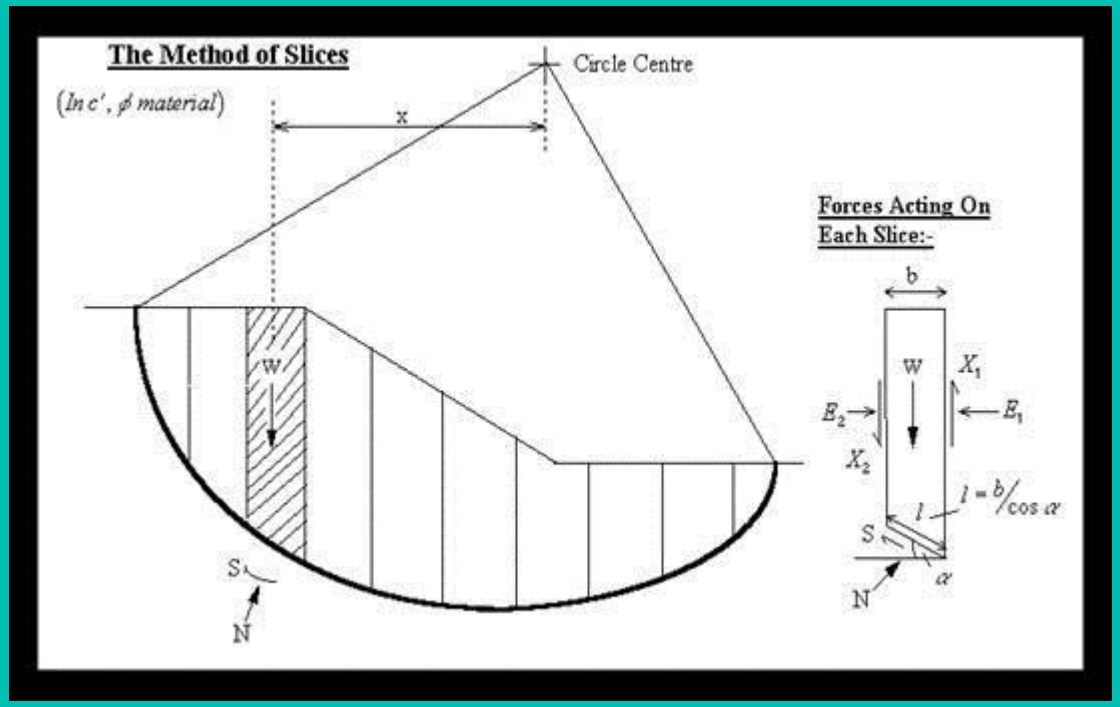

Anglia Ruskin University

What maths do Civil Engineers need?

- Algebra
- Geometry and Trigonometry
- Statistics
- Calculus ?

Anglia Ruskin University

Application

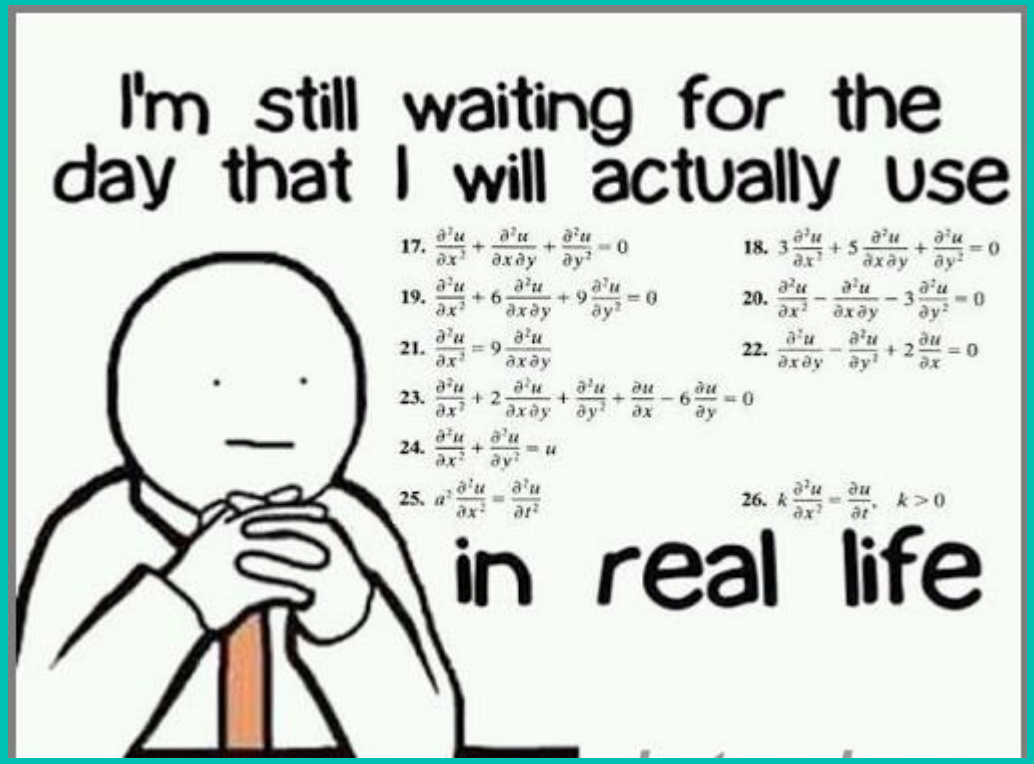

Anglia Ruskin University

Problem Solving

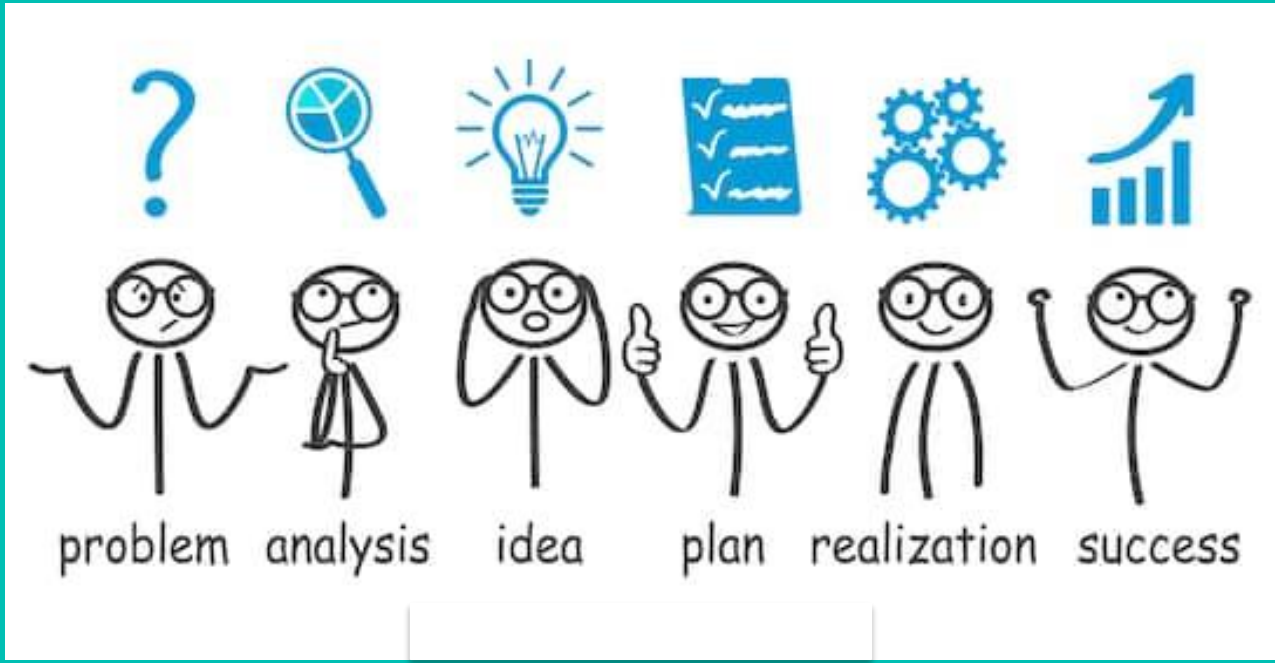

Anglia Ruskin University

A seawater contamination barrier is to be made from high density foam floats which are to be shaped as shown in the figure. The form is parabolic with a cylindrical hole through the centre so the floats can be held on a rope. Calculate the volume of high density foam required to make 5000 floats.

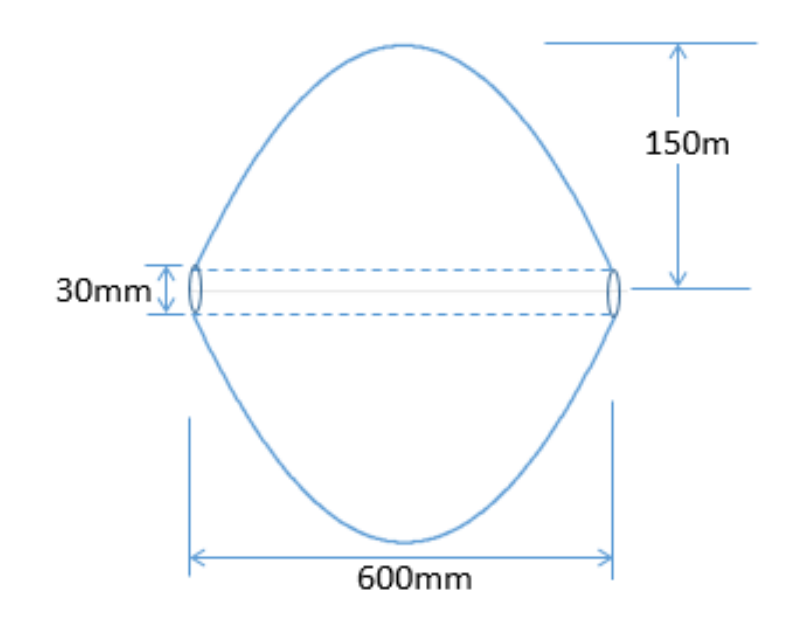

Anglia Ruskin University

As part of the temporary works for an underwater pipeline project, 24 No. cylindrical flotation tanks with an external volume of 2.00m^3 are required. The tanks will be made of steel plate with welded joints. (Assume that the thickness of the plate will be the same for the ends as for the sides of the tanks).

Determine the diameter and height for the tanks that will require the MINIMUM area of steel plate. (Ignore the thickness of the plate in your calculations and express your dimensions to the nearest mm).

Anglia Ruskin University

A large mixing tank holds m litres of water into which a known quantity of salt has been dissolved. At time $t = 0$ another salt solution with *p* grams per litre is pumped into the tank at the rate of n litres per minute and after mixing the water is pumped out at the same rate. The amount of salt (P) in grams in the tank at any time t is represented by the following differential equation:

$$\frac{dP}{dt} = np - \frac{nP}{m}$$

A large mixing tank holds 300 litres of water (m) into which 20 grams of salt has been dissolved. Brine containing 1 gram of salt per litre is then pumped into the tank at a rate of 4 litres/minutes; the solution is well mixed as it is pumped out at the same rate. How much salt will be in the solution in the tank after 5 minutes.

Anglia Ruskin University

It is a well established fact that the labour rate for fixing reinforcing bars depends on the diameter of bar being fixed: the smaller the bar, the more labour hours per tonne. The labour hours are also related to the complexity of the work.

The problem here is, as in most cases, a steel fixer will fix different diameters of bar at the same time. However, it is relatively easy if proper records are kept, to measure the total hours against the tonnage fixed.

So, to determine this, assume you have looked at some previous records (past production figures and timesheets), as given below:

<u>Month 1</u>

12.0 tonnes of 16mm diameter and 8.0 tonnes of 10mm diameter fixed in a total of 389 labour hours.

<u>Month 2</u>

9.7 tonnes of 16mm diameter and 6.9 tonnes of 10mm diameter fixed in a total of 325 labour hours.

Anglia Ruskin University

Less is More

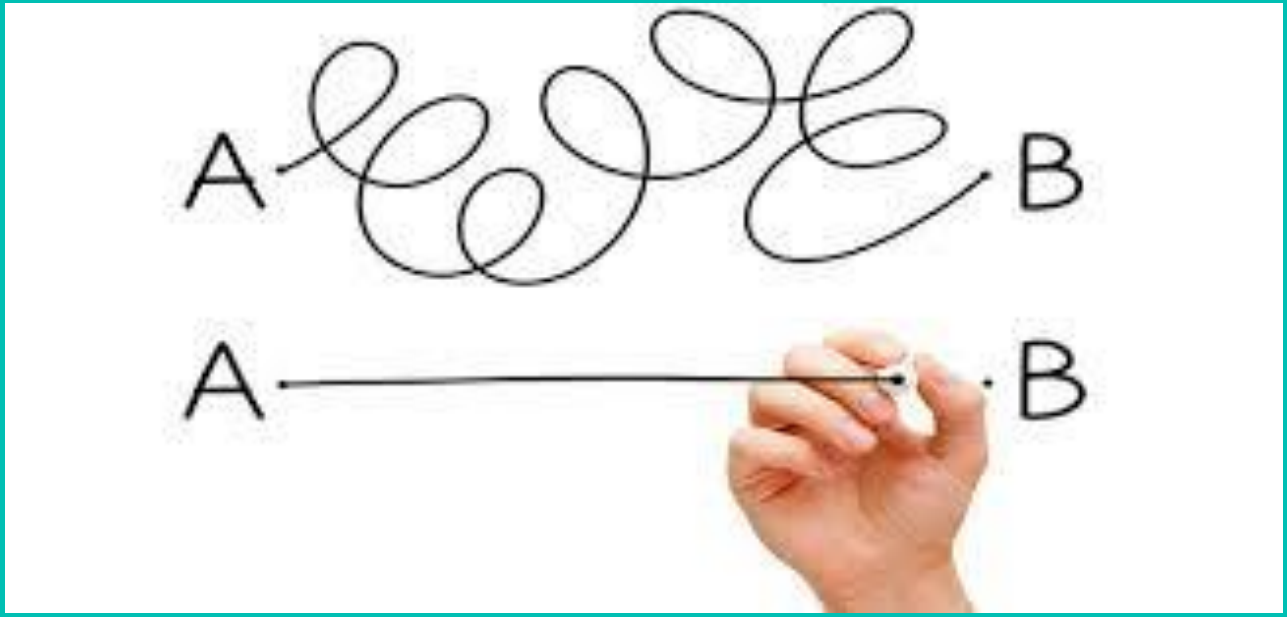
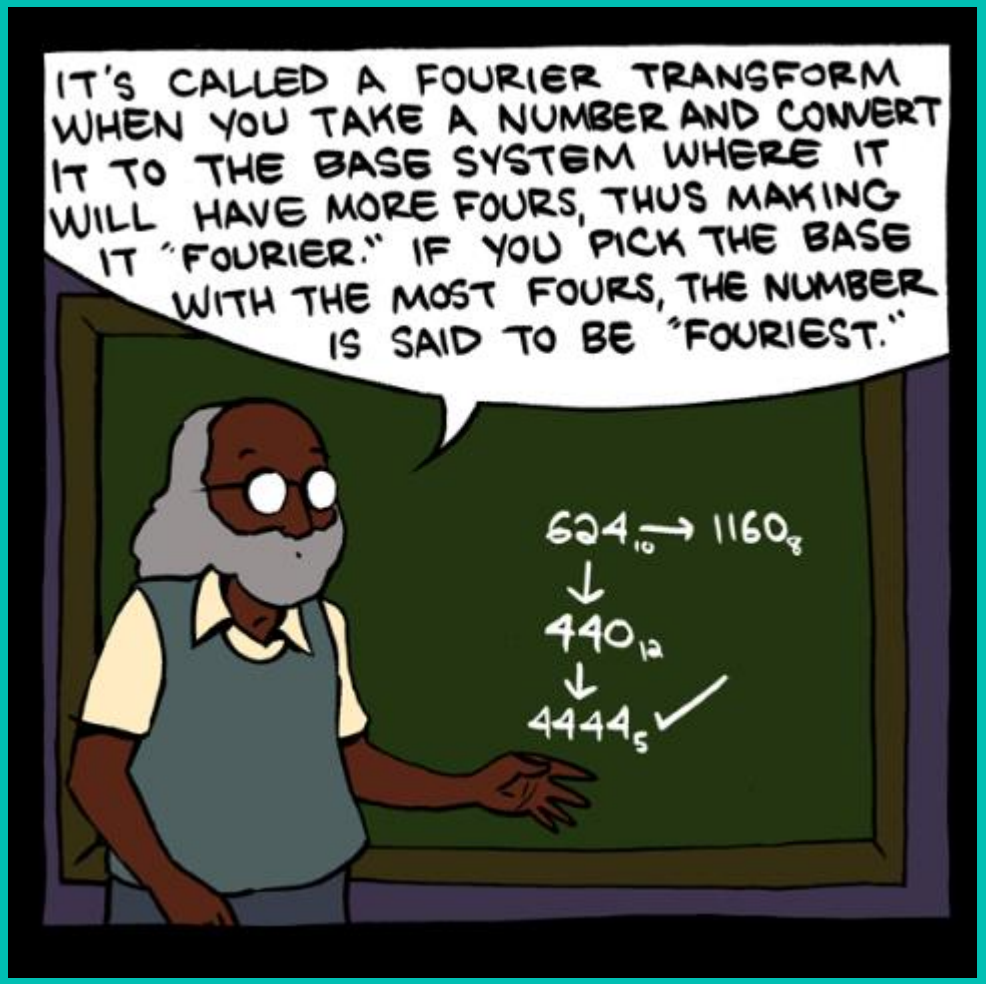
Anglia Ruskin University